VVHC

VAV CONTROL FOR CONSTANT VOLUME SYSTEMS

Designed to control up to 32 zones

VVHC ENHANCED

Designed To Centralize Control Of Multiple Constant Volume VAV Systems

System Design, Installation and Startup

CALIFORNIA ECONOMIZER

The Zoning Systems Company

Part # 502,685M
Rev. MAY 1, 1998

TABLE OF CONTENTS

	PAGE #
INTRODUCTION TO THE VVHC SYSTEM	1
System Diagram	1
COMPONENTS	2
Component Selection Guide	3
CONTROL CENTER	4
Data Lines	4
ATS	4
External Modem / Multiplexer	5
Installation and Wiring	5
Programming the Control Center	6-9
SYSTEM WIRING LAYOUT	10
T577 ZONE THERMOSTAT	37
Subbase Installation and Checkout	38
Thermostat Assembly and Wiring	39
Remote Sensor for Zone stat	39
Thermostat Installation and Set Up	40
ROUND ZONE DAMPERS	41
Wiring to a Zone Thermostat	39
Slave Wiring	42
RECTANGULAR ZONE DAMPERS	42
Wiring to a Zone Thermostat	39
Slave Wiring	42
BYPASS DAMPERS	43
Sizing Round Bypass Dampers	43
Sizing Rectangular Bypass Dampers	43-44
Bypass Damper Position Indicators	44
Slaving Bypass Dampers to one Static Pressure Controller	44
Wiring to the Static Pressure Sensor	45
STATIC PRESSURE CONTROLLER	45
Installation, Set Up, Check Out	45
Wiring to the Bypass Damper	45
CAPACITY CONTROL (CAP)	46
Sequence of Operation	47
Wiring, Installation	48
Remote Sensor Wiring	48

VVHC is a fully modulating, auto changeover, bypass VAV system. VVHC is simple to install and easy to operate. The VVHC Controller supports up to 32 zones per HVAC unit. This system provides the Design Engineer or Installing Contractor with a unique alternative to complex DDC systems available today. A sixteen character display allows the user to interface with the VVHC Controller in English instead of using complicated codes, rotary switches and buttons. The VVHC Controller is fully programmable on site or via a remote DOS based computer.

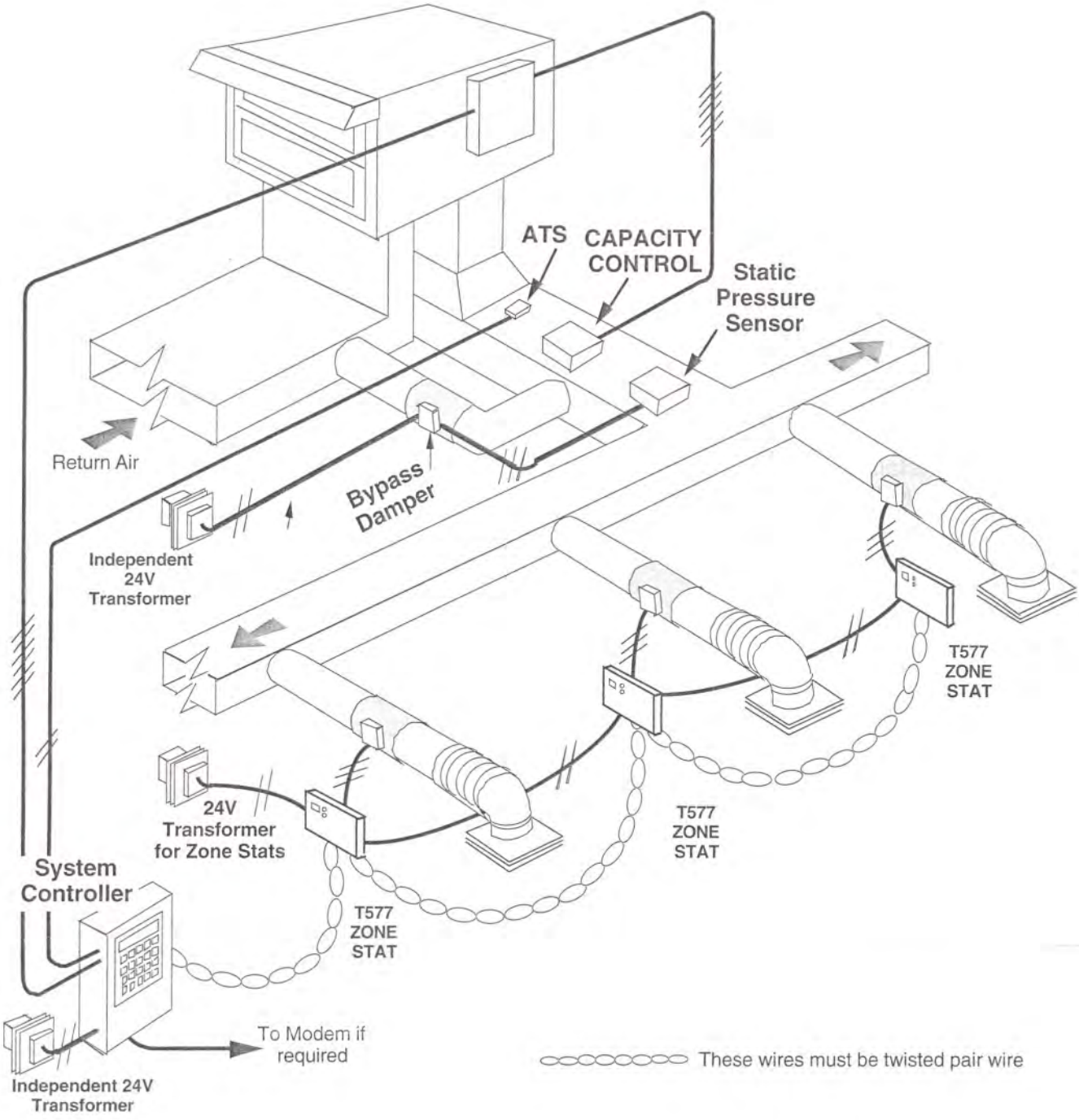

California Economizer's *VVHC SYSTEM:*

COMPONENTS

1. CONTROL CENTER: (Part # 37P37) Supports up to 1 A/C units and 32 zones

2. ATS SENSOR: (Part # 37P41) Allows Control Center to display leaving air temperature. One per Control Center.

3. CAPACITY CONTROL: Prevents coil freeze up, short cycling, premature heat exchanger failure and compressor slugging.
   A. The Capacity Controller (Part # 46N54) provides capacity control for the unit.

4. T577 ZONE THERMOSTATS: (Part # 13N07)
   One stat is required for each zone. Up to 3 dampers can be slaved or controlled by one stat.

   NOTE: Only VVHC thermostats can be used with the VVHC system.

5. ZONE DAMPERS:
   A. ROUND (Part # STMPDsize) (for application with max 1.75" ESP).
      Available in 6", 8", 10", 12", 14",16" and 18" sizes.
   B. RECTANGULAR (Part # STCD WxH) (for application with max 1.75" ESP).
      Available in sizes 8" X 8" up to 48" X 48".

6. BYPASS DAMPERS:
   A. Round Electronic Bypass (Part # STMPDsize) Available in 6", 8", 10", 12", 14" and 16" sizes.
   B. Rectangular Electronic Bypass (Part # STCD WxH) Available in sizes 8" X 8" up to 48" X 48".

7. BYPASS CONTROLLER: Multiple round or rectangular bypass dampers may be slaved to one Bypass Controller.
   A. Static Pressure control (Part # 30N63).

8. EXTERNAL MODEM & DOS BASED SOFTWARE: (Part #59P64)
   Allows remote modification and monitoring of one VVHC system.

9. MULTIPLEXER: (Part #59P64)
   In conjunction with the External Modem listed above the Multiplexer allows remote modification and monitoring of 1 to 8 VVHC systems.

9. MULTIPLEXER CABLE: (Part #62P42)
   One is needed for each VVHC System monitored by the Multiplexer

10. FIELD SUPPLIED COMPONENTS:
    A. A 24 volt 40 VA transformer is needed for the bypass damper.
    B. A single fused 24V transformer or independent transformers can be used to power all zone dampers. Size your transformer based on the number of dampers tied to the transformer. For example, each damper motor draws 6VA. If you have ten zone dampers, you would need a 60VA transformer (10x6).
       (Do not parallel transformers).
    C. Independent 24V transformer is required to power the Control Center.
    D. The two wire twisted pair Data line must be wired with minimum 22 ga. twisted pair control cable.

    Note: Celsius version available. Call factory for part numbers.

VVHC COMPONENT SELECTION GUIDE

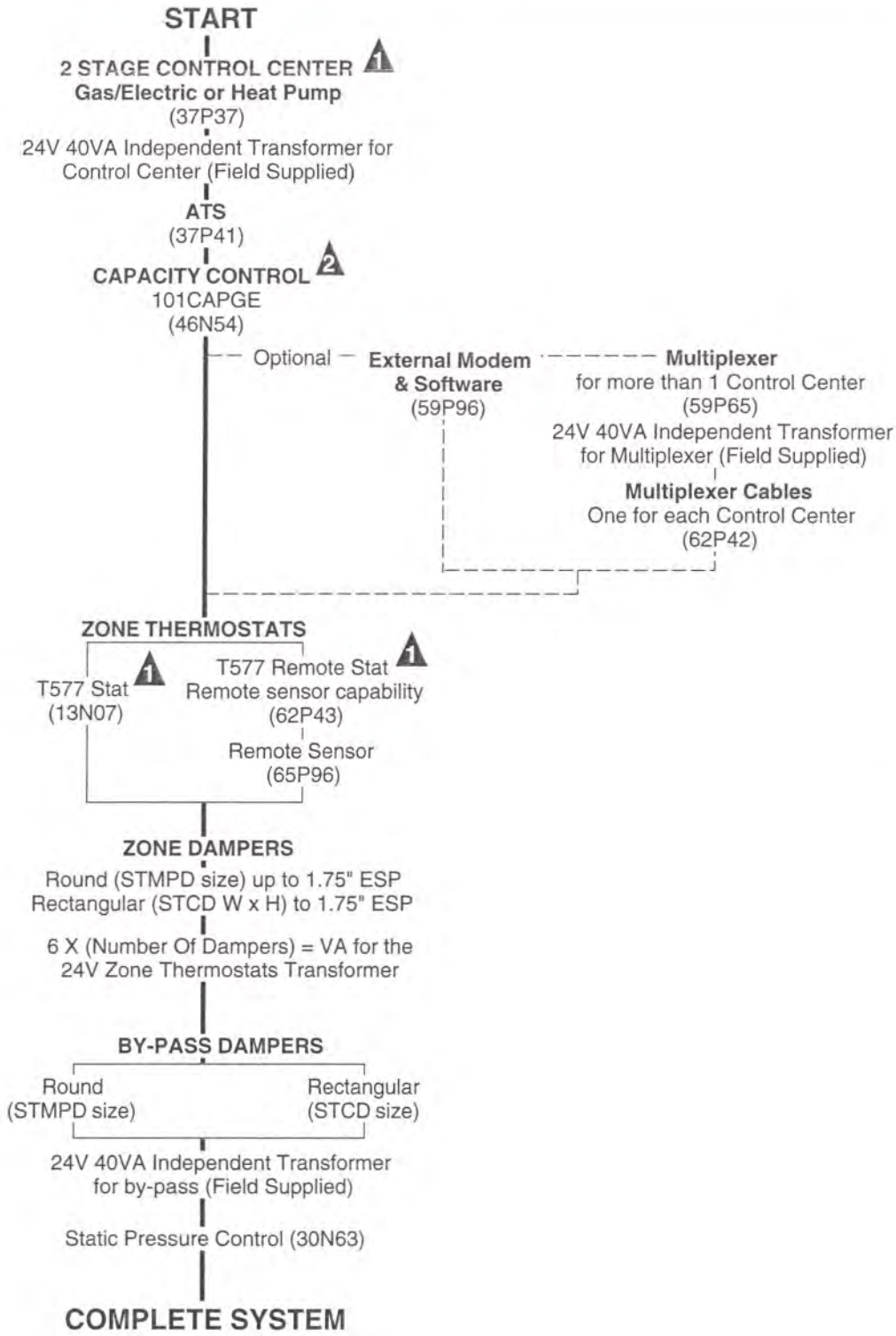

1 Celsius parts are available. Call Factory for part numbers.

2 For heat applications the heat cutoff set point on the101CAPGE must be modified to 118 degrees during installation.

VVHC CONTROL CENTER

Controller Fahrenheit Part # 37P37

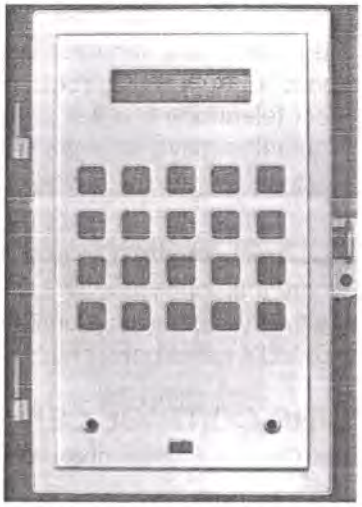

DIMENSIONS 6.5" X 9" X 2"

The VVHC Control Center is a microprocessor based system controller. The Control Center is the system decision maker, designed to control one HVAC unit and up to 32 zone dampers. The Control Center makes decisions based on zone temperatures and damper position information. This information is gathered once a minute over a two-wire twisted pair. Cool and heat calls from each zone are compared to cooling and heating setpoints. Compressors and heaters are turned on and off based on this information. If there are equal numbers of calls for heating and cooling, the Controller will check to see which zone temperature is farthest away from the setpoints. Once this is done, the proper mode will be initiated. If after 8 minutes, no heating or cooling calls exist, the Control Center will instruct the dampers to open to 50 percent for ventilation.

20-KEY KEYPAD

The Control Center has a 20-key keypad used to program and access information about the system. A sixteen character display reads out the information in English. Information is programmed into the Control Center by responding to questions and toggling the requested keys. For example, to select the mode Auto, Cool or Heat, the "MODE" key is pressed until the desired mode appears on the screen. Then the "ENTER" key is pressed. No codes are used.

MODEM CAPABILITY

All programming and monitoring functions are accessible by adding a telephone line with an on site modem. Off site VVHC call out DOS based software and an IBM compatible DOS based computer with modem, complete the communications system.

"HELP" KEY

A "HELP" key is also available to assist the system operator should there be any questions. An operator, unfamiliar with the function of a menu selection or its purpose, can simply press the "MENU" key until the function in question appears, and then press the "HELP" key. A readout will appear on the display explaining the selection in question.

TIME CLOCK FUNCTIONS

The Control Center has a built-in 7-day time clock. Multiple on and off times may be scheduled for each day or on a common 5-day week, 2-day weekend schedule for any zone. Four separate schedules with multiple on and off times may be scheduled. Any zone can be attached to one of the four schedules. After hours use may be accomplished with a momentary contact switch on any VVHC Zone Stat.

DATA LINES

The Data Line consists of two wires which operate like a party line telephone exchange. These two wires operate like a party line telephone exchange and can carry as much information as 436 separate wires. This type of Data Line eliminates any confusing "home runs" and possible wiring mistakes. This feature greatly reduces the amount of time and confusion it takes to install and start up the system.

The advantage of the twisted pair is that it is self shielding. A negative and positive pulse are sent across the two wires simultaneously. These pulses loop around each other because of the twist in the wire. Due to this looping action, the antenna capability of the Data Line is lost and the wires are protected from outside interference.

The two wire twisted pair must be wired with minimum 22 ga. twisted pair control cable. (The twisted pair should be equal to Belden 8740 solid, PVC coated, or 88442 stranded plenum-rated Teflon covered wire.)

WIRING

An independent 24 volt 12VA (minimum) transformer is required for the Control Center. The battery backup will save all programmed information in the event of a power failure. All other wires, except the data lines, should be 18 ga. solid.

ATS (Dimensions 3.5" X 3" X 1") Part # 37P71

An Air Temperature Sensor (ATS) enables the Control Center to read out the unit discharge temperature. The ATS consists of a simple thermistor temperature sensing device. The ATS should be placed downstream on the discharge side of the unit before the bypass take off. The sensor is connected by two shielded wires (minimum 22 ga.), supplied by the installing contractor, with the shield tied to a ground conduit. The wires should not exceed two hundred feet in length and should be connected to the remote sensor using the screw terminals provided. These wires have no polarity, so either one can be connected to ATS "+" or "-".

EXTERNAL MODEM (Dimensions 6" X 11" X 2") Includes DOS software Part # 59P64

The modem is a separate item external to the Control Center. When it is added, it will allow remote modification or monitoring of the Control Center and all of the zones in the system via remote DOS based computer. A dedicated direct telephone line will allow the servicing contractor to make inquires, check and modify system operations and trouble shoot system components. Modem installation is as easy as plugging in a phone jack. The external modem will require its own 120 volt outlet and dedicated phone line.

MULTIPLEXER (Dimensions 10" X 7" X 2") Part # 59P65 Multiplexer Cables Part # 62P42

If more than one Controller is located in a building and remote communication is necessary, use the VVHC Multiplexer to simplify communications. The Multiplexer allows one modem to talk with up to eight Control Centers. Order one 100' MUX cable per Control Center and the External modem package when ordering the Multiplexer.

VVHC CONTROL CENTER INSTALLATION AND WIRING

The Control Center does not act as a zone thermostat. Mount the Control Center in a location away from daily operations. A maintenance room or service closet will do. An independent 24Volt 40 VA transformer is required to power the Control Center. No other device should be connected to this transformer. Connect the transformer to the terminals labeled TR1 and TR2. Run the normal wires required for the HVAC unit through the CAP to the Control Center as if it were a regular cooling and heating thermostat. (See Control Center wiring). Connect these wires to the terminal strip labeled Y1, Y2, W1, W2, R, and G. Connect Data Lines into the terminals marked "Data +" and "Data -". Make sure the polarity of the Data Line wires are correct!!! Three size "AA" batteries, factory supplied, should be installed into the battery case located under the Control Center circuit board. Disconnect the battery clip from the battery case. Connect the battery wires, making sure that the red wire is connected to the "Bat+" terminal. After installing the batteries and supplying 24 Volts to the Controller, turn on the power switch on the front of the Controller. Press and hold the reset button located on the back of the circuit board for 2 seconds. This button should be used any time the batteries are replaced, or, in the event that the display seems to be locked up. Now connect the battery clip to the battery case. The battery backup will retain all information programmed into the VVHC Controller in the event of a power failure for up to 2 weeks. It is recommended that the batteries be replaced every six months.

CONTROL CENTER WIRING

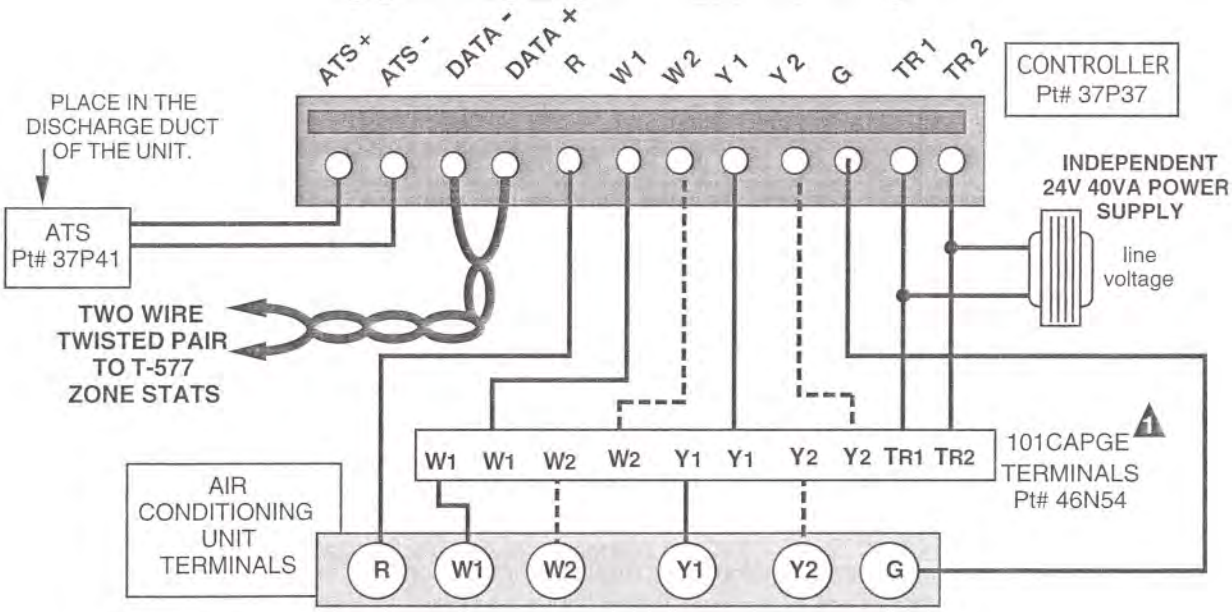

------ Wire for Two Stage Systems

1 For heat pump operation the heat cutoff set point for the 101CAPGE must be field modified to 118 degrees during installation

AIR TEMPERATURE SENSOR INSTALLATION (ATS) Pt# 37P41 (Optional)

Mount the Air Temperature Sensor in the leaving air side of the HVAC unit before the bypass takeoff. The sensor is connected by two shielded wires (minimum 22 ga.), supplied by the installing contractor, with the shield tied to a ground conduit. The wires should not exceed two hundred feet in length and should be connected to the remote sensor using the screw terminals. These wires have no polarity, so either one can be connected to ATS "+" or "-".

PROGRAMMING THE CONTROL CENTER

WORKING WITH THE VVHC CONTROLLER CENTER

The VVHC Control Center contains a 20-key keypad which is used to select, modify and monitor all of the functions in the system. Three size "AA" batteries, factory supplied, should be installed into the battery case located under the Control Center circuit board. Access the battery case by removing the two screws located on the front of the Controller panel. Disconnect the battery clip from the battery case. After installing the batteries and supplying 24 Volts to the Controller, turn on the power switch on the front of the Controller. Press and hold the reset button located on the back of the circuit board for 2 seconds. This button should be used any time the batteries are replaced, or, in the event that the display seems to be locked up. Now connect the battery clip to the battery case. The battery backup will retain all information programmed into the VVHC Controller in the event of a power failure.

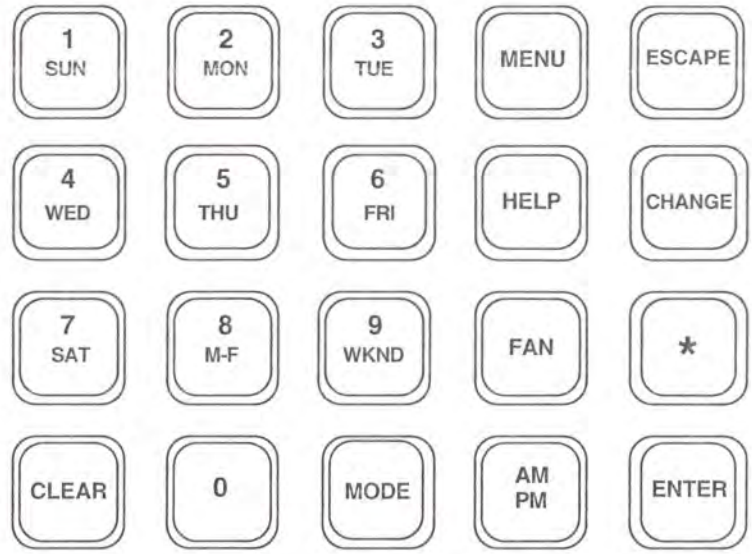

If the Controller displays a number during polling, it is indicating that it <u>can not contact</u> that zone. Check the Data line connections for breaks or disconnects and check the ID switches for proper settings.

ESC: The "Escape" key should be used if, at any time, it is necessary to stop entering information. It will return the display to normal operation. It should also be used before selecting the "Menu" key. This will always bring the program back to the same starting point. When an "Error" message appears, use the "ESC" key to return to normal operation.

MENU: The "Menu" key is used to page through the menu selections in the order they are listed below and in the Control Center cover. Start by pressing "ESC", then the "Menu" key. Continue pressing the "Menu" key until the desired selection appears on the display. A more direct method to access an operation is to press the "ESC" key, then the "Menu" key, and select the number (1 through 11) for the preferred operation. Now, press the "Enter" key. The words "Press Enter" will appear on the display. Press the "Enter" key again to initiate programming of the selected operation.

HELP: By pressing the "Help" key after selecting a menu option, the display will read out information or instructions about that procedure which is currently displayed. The operator will then be prompted with a question so the proper information can be entered.

Press the "ESC" key then press the "MENU" key 1 time. The screen should read:

1> **MONITOR ZONE:** Press "Enter" and respond by entering the zone number you want to monitor. Then press "Enter". Information for the requested zone will appear immediately and update every 15 seconds. The zone number, current zone temperature, requested temperature offset and damper position in percent open will be displayed. If all zeros appear on the display, the zone is not communicating. To cancel monitoring of a zone, Press "ESC", then request to monitor zone "0". This will cancel all monitoring requests.

Press the "ESC" key then press the "MENU" key 2 times. The screen should read:

2> **SET TIME:** Press "Enter" then enter in the current time using the numeric keypad. Press the "AM/PM" key to select AM or PM. Press "Enter".

Press the "ESC" key then press the "MENU" key 3 times. The screen should read:

3> **SET DAY:** Press "Enter" and then select the proper day of the week, Sun, Mon, Tues, etc. from the keypad. Press "Enter".

Press the "ESC" key then press the "MENU" key 4 times. The screen should read:

4> **MANUAL OPERATION:** Press "Enter" twice and the Controller will display "MODE?". Press the "Mode" key until the required mode appears on the display, press "Enter". Now "FAN?" will appear on the display. Press the "Fan" key until the desired setting, "INIT" for intermittent or "CONT" for continuous, appears on the display, press "Enter".

Next, the Controller will display "HEAT SET?". This will be the Heat setpoint during manual operation. Press the required numerical keys (EG: 69) and then press "Enter". Now, the Controller will display "COOL SET?". This will be the Cool setpoint during manual operation. Press the required numerical keys (EG: 73) and then press "Enter". Note that there must be a 2 degree dead band between the heating and cooling setpoints. The display will automatically return to its standard display after the cooling setpoint has been entered. After the Controller polls, manual operation will begin. Review the manual settings by selecting "10 VIEW MODE AND SETPOINTS". See #10 on the next page.

Press the "ESC" key then press the "MENU" key 5 times. The screen should read:

5> **READ/CHANGE SCHEDULE:** Press "Enter" twice and "SCHED 1" will appear on the display. This is the default schedule and can be modified by pressing the "Change" key. Press the "Enter" key until the time or function that needs to be changed appears on the display. Press the "Change" key and select the proper key, such as "Mode", to change the mode from heat, cool or auto, or "Fan" key to change the fan setting from intermittent to continuous. The display will page through each possible setting one at a time. All schedules will be displayed and can be modified. Once the needed modification is made and "Enter" is pressed, use the "ESC" key to return to normal operation. For the Control Center to recognize a change in the schedule, it is necessary for the time clock to cross the time programmed for this event. For example, if the operator wanted to change the cool setpoint from 74 degrees to 72 degrees, he would press the "Enter" key until "COOL 74" was displayed on the LCD screen. Then he would press the "Change" key. The screen then displays "TEMP?". He would then enter in 72 and press "Enter". Note that there must be a 2 degree dead band between the heating and cooling setpoints. He would press "ESC" to continue normal operation or "Enter" to continue paging through the settings if another change is necessary. The Controller will not recognize the change until the next day when the time clock crosses over the time the new setpoint is programmed to activate. If an immediate change is necessary, program the permanent change using #5, then go to #4 (Manual Operation) and program the same settings. The system will then run at the manual settings until it crosses over the next scheduled change in the memory.

Press the "ESC" key then press the "MENU" key 6 times. The screen should read:

6> ENTER SCHEDULE

ADDING ADDITIONAL EVENTS: Use this option to add on/off times to the existing program. If times or temperatures need to be added to the existing "Schedule #1" use "Enter Schedule". The Controller will ask "Sked Nr?" and since more information is being added for "Schedule #1" respond by pressing "1" and press "Enter". Every time the question is asked "Sked Nr?" answer 1. Then continue answering the questions, "Day ?" press the day key you wish the event to occur on, then press "Enter". "Time ?'" press the numeric keys corresponding to the time of the event, then press the "AM/PM" key to assign AM or PM, then press "Enter". "Mode ?" press the "Mode" key until the correct mode for this event is displayed, then press "Enter". "Fan ?" press the "Fan" key to select the fan setting, then press "Enter". "Heat Set" press the numeric keys corresponding to the heat set point for this period, then press "Enter". "Cool Set" press the numeric keys corresponding to the cool set point for this period, then press "Enter". There must be a 2 degree dead band between the heating and cooling setpoints.

ADDING MORE SCHEDULES: The Control Center can be programmed for up to four individual schedules which can be assigned to different zones or groups of zones. These schedules can contain multiple on and off times, cooling/heating setpoints, mode and fan settings. Use additional schedule numbers when one zone or multiple zones need to have separate time clock operation or setpoints. For example, if you want to give a lunch room its own operating schedule or setpoints and zone #4 and #5 are delivering air to the lunch room, schedule #2 should be used for these zones. Since the rest of the system is running on schedule #1 the next schedule number would be #2.

Press the "ESC" then press the "MENU" key 6 times until the screen reads "Enter Schedule". Press "Enter", answer the controller's questions which will pertain to the first event of the day. Enter the schedule # ("2" for this example), day, start time, mode, fan and setpoints. Then it will ask "Sked Nr?" again. You will need a setback time, so respond by entering #2 again since the setback is for the lunch room. Continue entering as many on and off times as needed. Each time the Controller asks "Sked Nr? answer "2" as long as this schedule is for the lunch room. If a third schedule is needed for another area, assign them "Schedule #3". To assign the lunch rooms zone #4 and #5 to Schedule #2 use MENU selection # 8, "ZONE LIMIT SELECT".

Press the "ESC" key then press the "MENU" key 7 times. The screen should read:

7> **CLEAR SCHEDULE:** This selection does just that. Press "Enter" then press the "*" key and all existing schedules will be erased including the default schedule. If you review the schedule after clearing it using "Read/Change Schedule" option, the display will revert back to the day and time screen since the memory has been cleared. It is then necessary to create a new schedule by using the "6 ENTER SCHEDULE" listed above.

Press the "ESC" key then press the "MENU" key 8 times. The screen should read:

8> **ZONE LIMIT SELECT:** Before programming this information, go to "#9 Select Max zones" first and enter the number of zones connected to the HVAC unit. Now that the Controller knows how many zones it will be controlling, continue with #8. This function allows each zone to be assigned to any of four different schedules with an individual maximum and minimum percent open setting . After pressing "Enter" twice, the zone number will be displayed. Press "Enter" again and the current settings will be displayed for the requested zone. The first letters "S1" mean that this zone is now attached to Schedule #1. Next, the low and high limit for damper positions are displayed. If these settings are acceptable, continue to the next zone by pressing "Enter". If they are not acceptable, press "Change" and the Control Center will ask for a schedule number "SKED?". Press the corresponding key to enter the schedule number you would like to assign this zone to, usually schedule #1. Press "Enter" and "HI LIMIT?" will be displayed. Press the corresponding keys to assign the dampers' maximum position in percent open which may be no lower than 52%. For example, to set the damper for full open, press 100 then "Enter". Next, "LO LIMIT?" will appear. This will set the minimum air flow setting for this damper which may not be higher than 48%.

Press the "ESC" key then press the "MENU" key 9 times. The screen should read:

9> **SELECT MAX ZONES:** It is necessary to tell the Control Center how many zones are being controlled. Press "Enter" twice and then press the appropriate number of zones in the system on the keypad. Press "Enter" again. If this is not done, the Controller will always look for 32 zones. If the Controller can't find a zone, it will display the zone number during the polling process. (This option should be programmed before #8 Zone Limit Select).

Press the "ESC" key then press the "MENU" key 10 times. The screen should read:

10> **VIEW MODE AND SETPOINTS:** This feature displays the current programmed mode and heat and cool setpoints. Press "Enter" twice to display them. Continue to page through the rest of the schedules by pressing "Enter". Press "ESC" to return to the first display.

Press the "ESC" key then press the "MENU" key 11 times. The screen should read:

11> **LAT:** Displays discharge air temperature sensed by the ATS. This is an optional feature. If no sensor is attached, the temperature displayed for the LAT will be 159. This is a default and does not reflect the leaving air temperature.

Below are listed all of the unit's status screens for the Control Center:

3:58 PM WED OFF

Time Day Unit Status: OFF

3:58 PM WED CLI

Unit Status: Cool stage 1

3:58 PM WED CL2

Unit Status: Cool stage 2

3:58 PM WED LK5

Unit Status:
Unit changeover is locked out for a 5 minute period.
This will count down by the minute.

3:58 PM WED H1

Unit Status: Heat stage 1

3:58 PM WED H2

Unit Status: Heat stage 2

3:58 PM WED H2 *

* Time clock Bypass (override) requested

IMPORTANT NOTES:

If the Controller displays a number during polling, it is indicating that it cannot contact that zone. Check the Data line connections for breaks or disconnects and check the "ADR" button on the zone stat for proper settings.

When setting the minimum damper position, it may not exceed 48%. The maximum damper position may not be lower than 52%. If an invalid number is entered, the display will show "ERROR". Press escape to return to normal operation.

The batteries in the Control Center should be replaced yearly. To check if the batteries are charged properly, set a meter at 20 volts DC and read across the "BAT +" and "BAT -" terminals for 4.5 volts. At 4.5 volts the batteries are fully charged.

Make sure the Bypass Damper has been properly set when the system is started! The Bypass Damper needs to be reset anytime the fan speed has been changed or after any air balancing.

EXAMPLE SCHEDULE SHEET

EVENT	SCHEDULE NUMBER	DAY	TIME	MODE	FAN	HEAT SET	COOL SET
1	SKED 1	M-F	5:30 AM	AUTO	CONT	69	74
2	SKED 1	M-F	7:00 PM	AUTO	INTR	55	85
3	SKED 1	WKD	1:00 AM	AUTO	INTR	55	85

WIRING LAYOUT

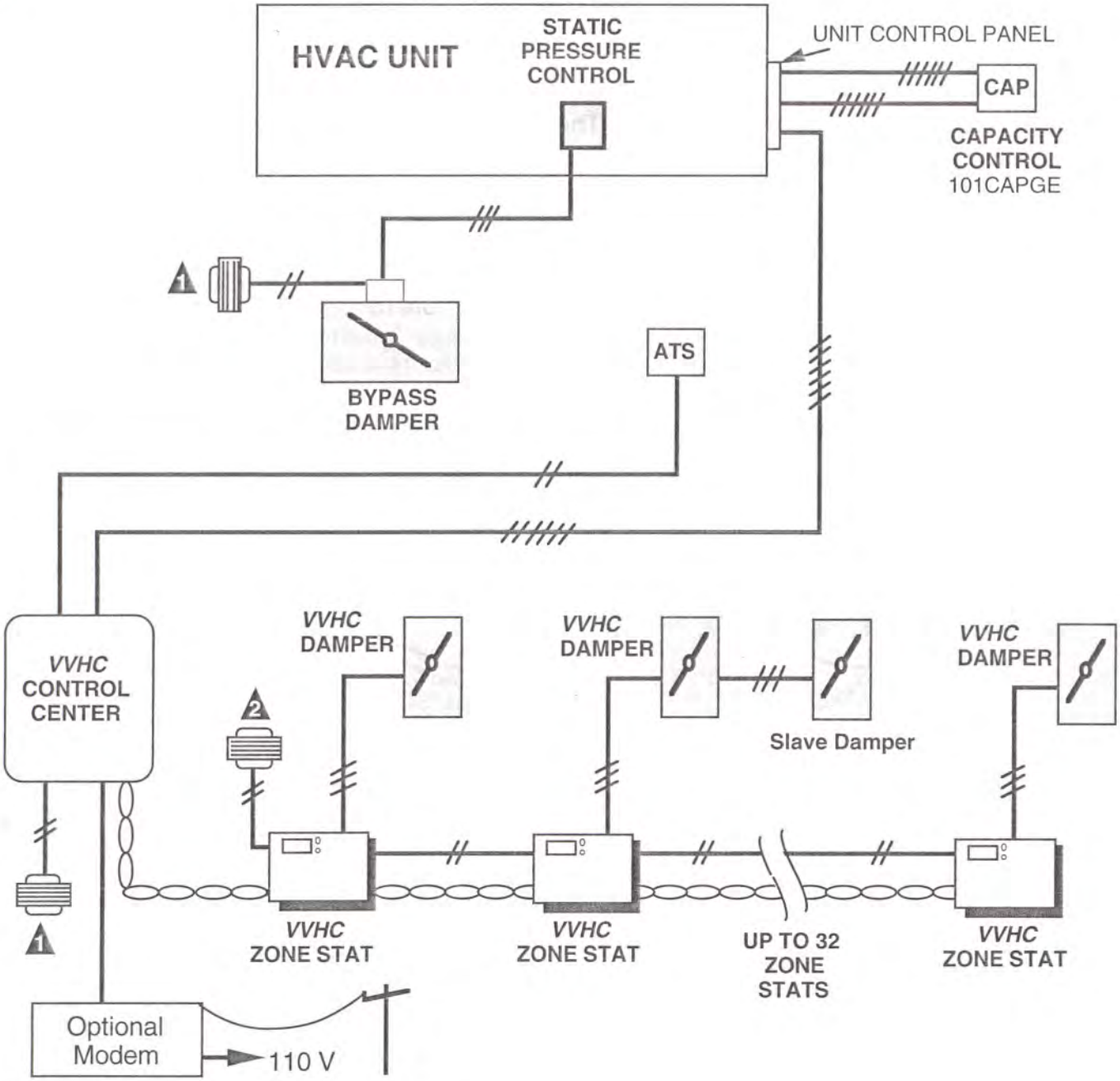

All wire should be 18 ga. solid except:

The data line should be equal to Beldon 8740 solid twisted pair.
The Air Temperature Sensor (ATS) wires should be minimum 22 ga. shielded, not to exceed 200 feet in length. Ground the shield to a conduit ground.

1 Independent 24 volt 40 VA transformer.

2 Single transformer to power all zone thermostats.
Must supply 6 VA per zone thermostat.

NOTE: Multiple transformers may be used to power zone thermostats.

VVHC T577 ZONE THERMOSTAT

Thermostat Fahrenheit	Part # 13N07
Thermostat Celsius	Part # 13N51
Thermostat Fahrenheit, Remote Sensor	Part # 62P43
Thermostat Celsius, Remote Sensor	Part # 35N84
Remote Sensor	Part # 65P96

The VVHC T577 zone thermostat contains all the electronics needed to control a zone. The stat contains a thermistor based digital temperature sensing system which allows the stat to report zone conditions to the Control Center. Zone temperature is displayed in either Fahrenheit or Celsius on a two digit LED display. The stat receives information from the Control Center and modulates the damper according to the zone needs. A simple two-wire twisted pair gives the stat the ability to send information and receive instructions from the Control Center. The only setup required for a zone, after it is wired, is the setting of the zone ID#. This give each stat its own identity. No programming is necessary at the stat.

The VVHC zone stat also has an auxiliary heat terminal which will activate a device, such as a radiant panel, baseboard or duct mounted strip heater. These auxiliary heat devices allow heat to be delivered to those zones which may need heat, even though the system majority requires cooling. The auxiliary heat terminal on the stat will activate the auxiliary heat device at set point.

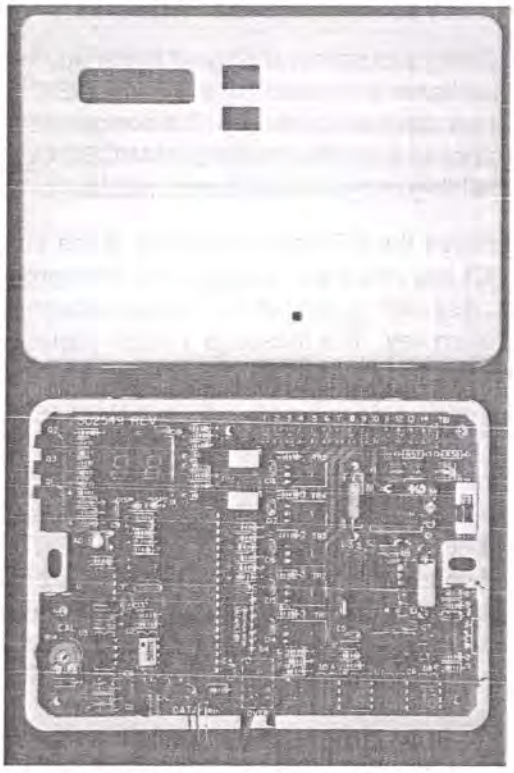

DIMENSIONS 4.5" X 6" X 1"

The VVHC zone stat also has a momentary contact "override" switch which can bypass a scheduled setback for the that zone's system and operate the HVAC unit and all of it's zones. One minute after the override is activated, the Control Center will check in the schedule and find out what is scheduled at 10:00 AM on Wednesday and operate on that setting for 2 hours. This momentary contact switch will automatically shut off after 2 hours. It can also be turned off manually by simply pressing the switch again.

VVHC Temperature Control

Heating and cooling set points for the HVAC unit are scheduled at the Control Center during startup. If no set point is entered, the Control Center will default to 69 degree heating and 74 degree cooling set points. The VVHC Zone Stat can be adjusted + or - 3 degrees from the system set point by the zone occupant. This provides each zone with an individual set point within a six degree temperature range from the system set point. This deviation is referred to as an Offset.

The VVHC temperature control strategy includes information input from all of the VVHC zone stats. As each VVHC stat is polled, the Control Center compares each zone temperature with the system set points. This also takes into account the zone requested Offset. Any zone with a temperature above the cooling set point is stored as a "cool call." Any zone with a temperature below the heating set point is stored as a "heat call." If there are more cool calls than heat calls, cooling is initiated. Next, the Control Center checks to see if any cool call is more than 1 degree above the cooling set point. If so, the Control Center will initiate first-stage compressor operation. If any cool call is more than 2 degrees above set point, both stages of cooling will be turned on. The reverse happens for the heat mode when heat calls predominate.

On system changeover, there is a five minute time delay between heating and cooling modes to protect the HVAC unit. During the changeover delay, the VVHC zone stat will reposition its damper for the new mode. This avoids sending the wrong temperature air to a zone. The damper travels from full open to full close in 90 seconds. If the system stays satisfied for an eight minute period and the discharge air temperature is between the heat and cool set points, all dampers will open to 50 percent to allow the system to ventilate.

Damper maximum and minimum air flow settings are set electronically by the VVHC Control Center. A simple percentage such as 20 percent minimum and 90 percent maximum may be entered into the Control Center for each zone. If required, mechanical set stops located on the damper can also be set.

T577 VVHC ZONE STAT SUBBASE INSTALLATION AND CHECKOUT

The back of the Stat Subbase is designed to mount directly onto a horizontally mounted handy box. The Subbase should not press against any metal surface. Locate the Zone Stat where it can sense normal zone load. Do not locate it on an outside wall or near a source of heat or cold. Air from registers, microwaves, coffee makers, copy machines, ETC. must not blow on the sensor. The subbase should be wired and checked according to the Subbase Wiring Checkout, below. This should be done before the VVHC stat is mounted to the subbase.

Wiring

All zone thermostat wiring should be done in 18 gauge or heavier solid thermostat wire except for the Data Lines. The Data Lines must be wired with 22 gauge twisted pair control cable. (The twisted pair should be equal to Belden 8740 solid, PVC Coated or 88442 stranded plenum-rated Teflon covered wire.) Set the VVHC zone stat ON/OFF switch to OFF position prior to startup. See "Typical Zone Stat and Subbase Wiring" for a complete zone wiring diagram. NOTE: The 24V wires may need to be larger than 18 gauge when line loss is taken into account.

Transformer

One 24V transformer can be used to supply power to all T577 VVHC Zone Thermostats. Each thermostat requires 6VA. When calculating VA, make sure to take line loss into account. Excessive voltage drops will affect the operation of the system. No thermostat should be operated with less than 22 volts. Multiple transformers may be used to power the T577 stats.

Auxiliary Heat Connections

Use terminal 6 and terminal 10 to wire to an auxiliary heat application. Follow the manufacturers wiring recommendations for the auxiliary heat unit. When using Auxiliary heat, increase the VA supplied to each Zone thermostat to include enough power for each Auxiliary heat unit.

SUBBASE CHECKOUT PROCEDURE This procedure requires that all thermostats be removed from their subbases and the Data Line be disconnected from the Control Center.

Data Line Checkout

Using a voltmeter set at 2K on the ohms scale, check between terminals 1 and 2 on the subbase to see if continuity exists. If there is continuity, the Data Line is crossed and lines 1 and 2 are connected together. This needs to be corrected before proceeding or damage will occur to all stats. Also, check each terminal to ground to see if continuity exists. If there is continuity, then the data line is grounded. Find the ground and fix it before moving on or all parts on the data line will be damaged.

Damper Motor Checkout

Using a voltmeter set at 200 on the ohms scale, connect one probe to terminal 7 and the other to terminal 9. Check for 25 ohms plus or minus 2 ohms. (If there are two dampers slaved together, this reading will be about 13 ohms, for three dampers 8 ohms and for 4 dampers 7 ohms). Next, check between terminals 8 and 9 for this same reading. If it is incorrect, check the wiring between the subbase and the zone damper board on terminals 7, 8 and 9. Also, check each terminal to ground to see if continuity exists. There should be no continuity to ground.

Transformer Wiring Checkout

Next, set the voltmeter for 200V AC. Check between terminals 10 and 11 for nominal 24 volts. If this reading is incorrect, check at the transformer for the same voltage. If the reading is correct at the transformer, check the wiring to the stat subbase. Next, change the meter to check for continuity. Check between 10 and ground and 11 and ground to make sure there is no continuity.

Damper Motor Movement Checkout

Short together terminals 7 and 11. Make a visual check to see that the red pointer on the damper moves towards closed on the indicator sticker of the damper. Next, disconnect the short to terminal 7 and short together terminals 8 and 11. The damper should move open. Check the red pointer on the damper to verify that damper is moving open. If the damper does not respond this way, check the wiring between the subbase and the zone damper board on terminals 7, 8 and 9.

T577 THERMOSTAT ASSEMBLY

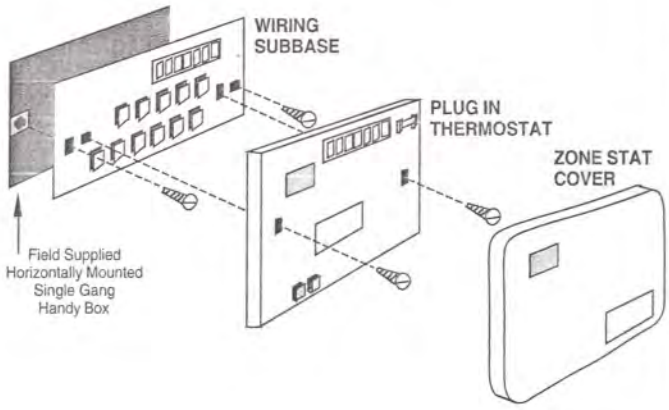

T577 STAT FUNCTIONS THIS BOARD PLUGS ONTO THE SUBBASE

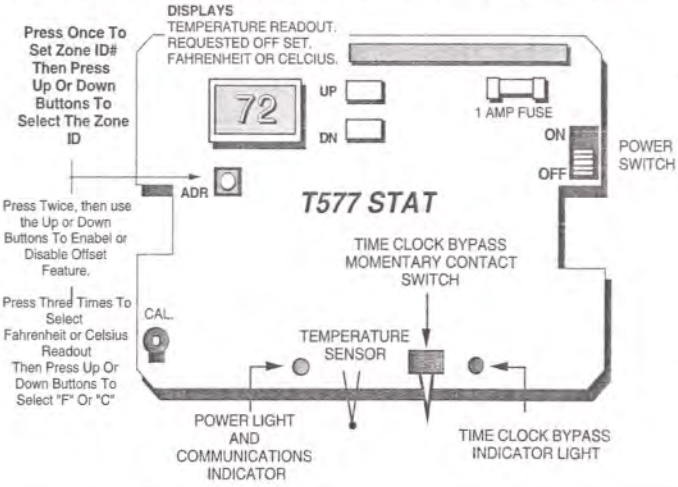

TYPICAL ROUND DAMPER AND 577 ZONE STAT SUBBASE WIRING

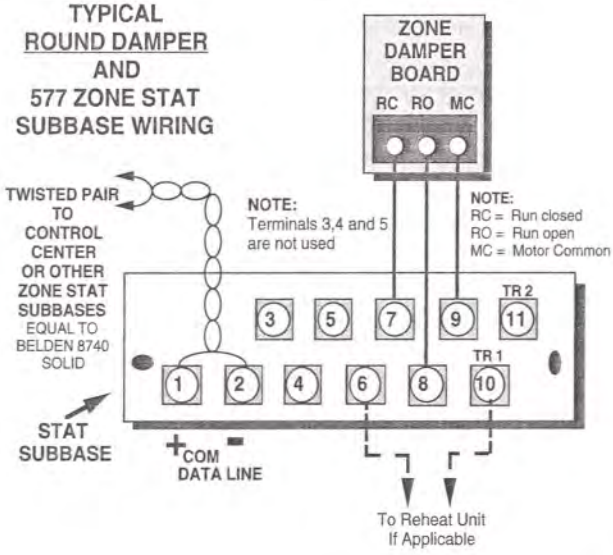

TYPICAL RECTANGULAR DAMPER AND 577 ZONE STAT SUBBASE WIRING

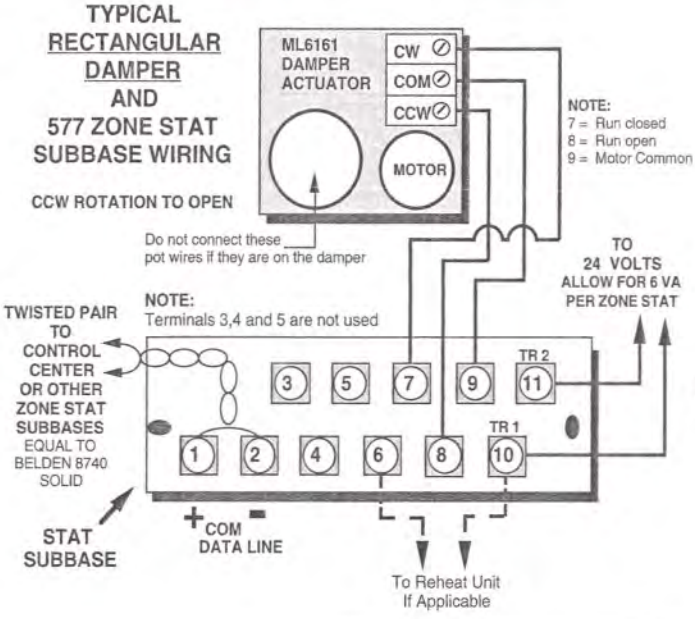

REMOTE SENSOR CAPABILITY (Order the 62P43 zone thermostat for Remote Sensor)

When it is necessary to remotely locate the temperature sensor for the VVHC zone thermostat, a thermostat set up for a remote sensor must be specified for the Zone. This application requires that a small box be mounted in the zone, or in the return air duct which will contain a thermistor temperature sensor.

If this option is chosen, the zone occupant will lose the ability to vary zone temperature "+" or "-" 3 degrees. The zones' time clock override capability will be accessible only from the actual thermostat location.

The remote sensor should be connected by two shielded 18ga. wires. Ground the shield on one side only to a conduit ground. These wires will be supplied by the installing contractor. The wires should not exceed two hundred feet in length. The two wires are connected to the remote sensor with screw terminals and have no polarity. At the thermostat, field supplied wire nuts will be used to connect the sensor wires to the stat board.

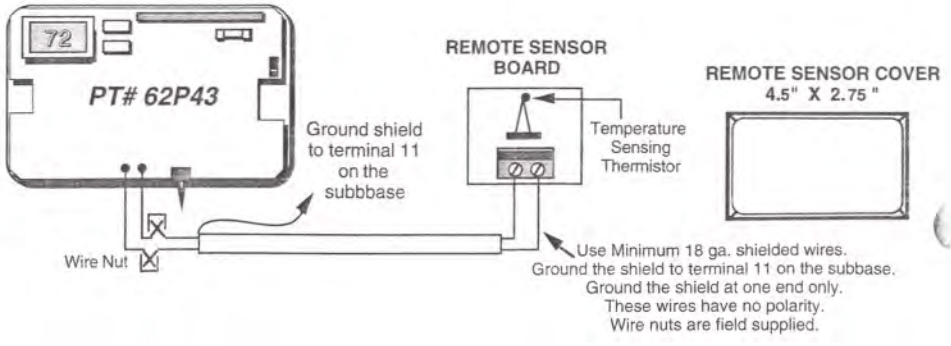

T577 VVHC ZONE STAT INSTALLATION

Plug the stat onto the subbase confirming that all of the subbase sockets are properly aligned with the pins on the back of the stat board. Secure stat to subbase with the screws provided.

Setting The Identification Number

Turn on the power switch and the temperature readout will temporarily display the stat ID # and then switch to the current temperature. Press the Address button located below the display, labeled as "ADR." (See T577 Zone Stat functions diagram). Once pressed, the current address will be displayed on the readout. The default address is "99". To modify the address, press the up and down buttons to the right of the display until the desired address is displayed. Each zone thermostat needs to have an individual ID number. Once entered, the address is stored in a nonvolatile memory. The display will return to displaying temperature after a short time out.

Zone Thermostat Auxiliary Heat

The auxiliary heat will activate at the heat set point. For example, if the heat set point is 70 degrees and the stat programmed offset is set to "0", when the temperature read out on the stat is at 70 or below, the stat will send a call for heat to the Controller and power the auxiliary heat terminals. To check to see if the auxiliary heat is activated, force the Controller to a heat set point at least 10 degrees above the zone stats local temperature. Wait for the Control Center to poll twice and then check between pins 6 and 10 on the Zone Stat circuit board face for 24 volts AC.

Set Point Offset

This option is available for the zone occupant or can be disabled. (see Quick Set Up below) Tap either button and the set point will be displayed. Once displayed, press the up or down button to change the set point. If pressing both buttons and the display does not change, the offset feature has been disabled. To enable it, press the "ADR" button twice. Then use the Up or Down buttons to Enable or Disable the set point offset feature.

QUICK SET UP

SET ZONE ID #:

Press the "ADR" button once to display the current zone ID number. Quickly press the up or down buttons to select the new zone ID number.

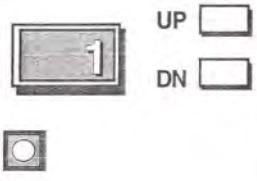

MODIFY SET POINT:

Tap either the up or down button. The current zone setpoint will appear with a dot at the top of the display. A dot to left of the numbers indicates that the system mode is heating. A dot between the numbers indicates the system mode is cooling. Press the up or down button to raise or lower the zone setpoint in a 6 degree range. If pressing the buttons has no effect, the offset feature has been disabled.

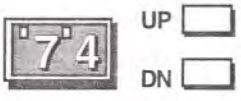

ENABLE OR DISABLE SET POINT:

To Disable or Enable the stats offset capability, press the "ADR" button twice. To toggle between Enabled or Disabled press the up button.

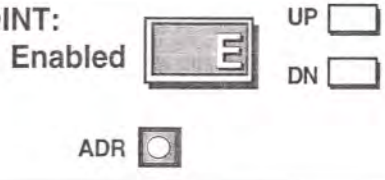

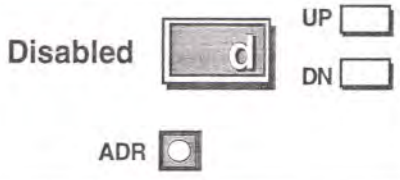

SWITCH DISPLAY MODES:

To switch between Fahrenheit or Celsius, press the "ADR" button 3 times. To toggle between Fahrenheit and Celsius press the up button.

ZONE DAMPERS

California Economizer zone dampers are used in cooling/heating systems to provide room by room zone control. The damper is provided with a factory mounted damper board and zone actuator. Each zone damper is controlled by a zone thermostat. More than one damper can be controlled by one zone thermostat; see Slaving Dampers.

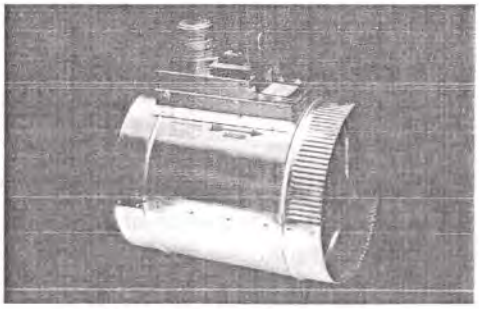

ROUND DAMPER (STMPD)

ROUND ZONE DAMPERS

California Economizer round zone dampers are recommended for systems with a maximum differential static pressure up to 1.75". This power open / power close damper is manufactured from 20-22 gauge galvanized steel with rolled-in stiffening beads for superior rigidity. Mechanical minimum and maximum set stops are provided and easily adjustable. The damper is elliptical, which allows the airflow to be tracked linearly. The damper pipe is furnished with one crimped end and one straight end for easy installation. A hat section supports two synchronous 24V AC 60Hz 6VA motors and a damper board. The motors are designed for continuous full stall operation. Special winding and heavy duty gearing provide for long motor life. A cross pin on the motor shaft provides positive direct drive to the damper blade gear without a coupling or set screws, allowing for a quick and easy motor change if required. Motor drive time from full open to full close is 90 seconds.

ROUND DAMPER PART NUMBERS AND SIZES

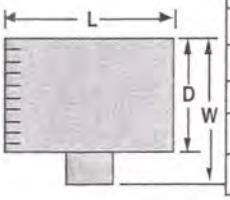

ROUND DIMENSIONAL DATA

PART #	SIZE	D	L	W
STMPD06	6	6"	10"	10"
STMPD08	8	8"	10"	12"
STMPD10	10	10"	12"	14"
STMPD12	12	12"	14"	16"
STMPD14	14	14"	16"	18"
STMPD16	16	16"	18"	20"
STMPD18	18	18"	20"	22"

TYPICAL ROUND CAPACITIES

These air quantities were derived from a duct sizing chart 0.1" friction loss per 100' of duct. All CFMs listed are approximate. For accurate selection use duct sizing table or device.

Duct Diameter	Nominal CFM	Duct Velocity FPM	Damper ΔP " WC
6"	110	540	.014
8"	250	700	.015
10"	410	750	.015
12"	660	850	.022
14"	1000	925	.035
16"	1450	1070	.036
18"	2000	1100	.036

SIZING ZONE DAMPERS

If the ductwork already exists, simply size the damper to fit the ductwork.
For new systems or retrofit jobs:

a) Determine CFM from heat gain or loss calculations.
b) Select damper size using either the round capacities chart, the rectangular capacities chart or by using a duct sizing table or calculator.
c) Select a *California Economizer* damper to fit the duct size selected for that zone.

INSTALLATION NOTES

1. Do not exceed 700 FPM in a register/diffuser branch duct.
2. If a damper is installed within 3 feet of register/diffuser, install sound attenuating flex duct between damper and outlet.
3. Zone dampers should be preceded by 2'-4' of straight pipe where possible.
4. In attic installations and high humidity areas, the *California Economizer* damper should be insulated along with the duct work. The hat section on the round damper is delivered with insulation between the hat section and pipe. Therefore, insulation should be applied to the round pipe and be butted against the hat section, (do not insulate the motor or damper board). Both motor and the damper board generate enough heat so no condensation will develop on the hat section.
5. Remember to allow a 16 inch gap in the duct for rectangular dampers.

RECTANGULAR ZONE DAMPERS

Part Number STCD W x H

Sizes available from 8" x 8" up to 48" x 48"

California Economizer rectangular dampers are designed with a maximum differential static pressure of 1.75". These are power open, power close dampers made of 20 gauge "snap-lock" steel frame with S & Drive duct connections. Allow a 16 inch gap in the duct for the damper. Formed steel blade stops incorporate a gasket for quiet operation and improved structural rigidity. Rectangular dampers under 10" in height incorporate a single blade design. Dampers 10" or over use opposed blade design. A full stall motor drawing 6 VA and a terminal board control the damper position.

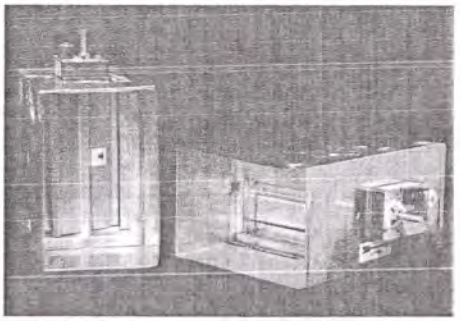

RECTANGULAR DAMPERS (STCD)

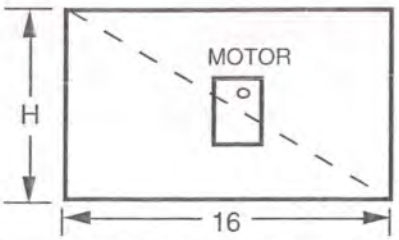

WIDTH	HEIGHT	DEPTH
W	H	16"

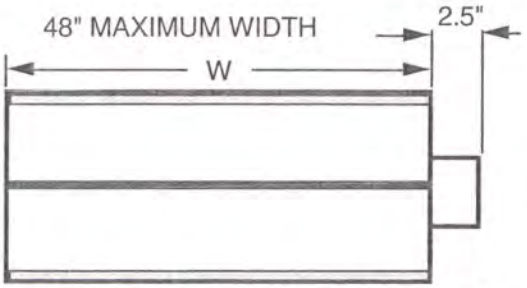

Rectangular dampers should operate at 1500 FPM.
E.G. A 24" x 12" damper = 2 square feet.
2 square feet X 1500FPM = 3000 CFM.

RECTANGULAR DAMPER CAPACITIES:*

Dampers listed below are standard sizes. For larger sizes and capacities contact the factory.

HEIGHT IN INCHES ↓ / WIDTH IN INCHES →	8	10	12	14	16	18	20	22	24	28	32	36	40	44	48
8	667	833	1000	1167	1333	1500	1667	1833	2000	2333	2667	3000	3333	3667	4000
10	833	1042	1250	1458	1667	1875	2083	2292	2500	2917	3333	3750	4167	4583	5000
12	1000	1250	1500	1750	2000	2250	2500	2750	3000	3500	4000	4500	5000	5500	6000
14	1167	1458	1750	2042	2333	2625	2917	3208	3500	4083	4667	5250	5833	6417	7000
16	1333	1667	2000	2333	2667	3000	3333	3667	4000	4667	5333	6000	6667	7333	8000
18	1500	1875	2250	2625	3000	3375	3750	4125	4500	5250	6000	6750	7500	8250	9000
20	1667	2083	2500	2917	3333	3750	4167	4583	5000	5833	6667	7500	8333	9167	10000
22	1833	2292	2750	3208	3667	4125	4583	5042	5500	6417	7333	8250	9167	10083	11000
24	2000	2500	3000	3500	4000	4500	5000	5500	6000	7000	8000	9000	10000	11000	12000
28	2333	2917	3500	4083	4667	5250	5833	6417	7000	8167	9333	10500	11667	12833	14000
32	2667	3333	4000	4667	5333	6000	6667	7333	8000	9333	10667	12000	13333	14667	16000
36	3000	3750	4500	5250	6000	6750	7500	8250	9000	10500	12000	13500	15000	16500	18000
40	3333	4167	5000	5833	6667	7500	8333	9167	10000	11667	13333	15000	16667	18333	20000
44	3667	4583	5500	6417	7333	8250	9167	10083	11000	12833	14667	16500	18333	20167	22000
48	4000	5000	6000	7000	8000	9000	10000	11000	12000	14000	16000	18000	20000	22000	24000

* These air quantities were derived from a duct sizing chart .1" friction loss per 100' of duct. All CFMs listed are approximate. For accurate selection use duct sizing table or device.

SLAVING UP TO FOUR ZONE DAMPERS

Choose one of the dampers to be slaved as the primary damper. Any of the dampers will do. Connect the Zone Stat to the primary damper. Terminals 7, 8, and 9 of the second damper should then be connected to terminals 7, 8, and 9 of the first damper. The third damper should be paralleled in the same way from the second damper and then to the fourth damper. The slave dampers will self synchronize each time the dampers reach full open or full closed.

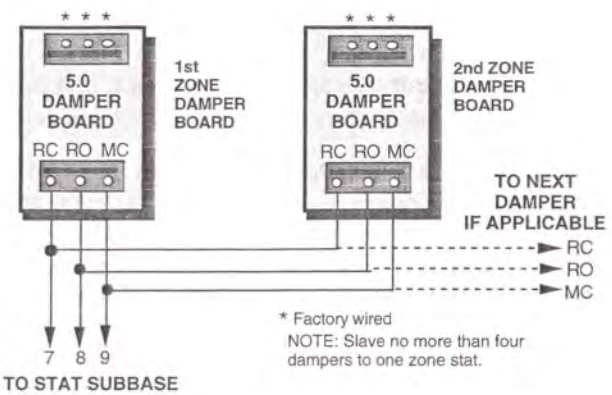

* Factory wired
NOTE: Slave no more than four dampers to one zone stat.

ELECTRONIC BYPASS DAMPER

Bypass dampers are used to provide constant air delivery through the air handling unit. This is done by bypassing excess air from the supply duct back to the return duct. As a zone is satisfied its zone damper closes. When this happens, the bypass damper opens just enough to bypass the excess air. This will control static pressure and noise at the diffusers.

The Electronic Bypass Damper can be used on any size system. The damper can be round or rectangular and multiple dampers can be slaved together. The Electronic Bypass Damper consists of a medium pressure round or a heavy duty rectangular damper and a static pressure sensor.

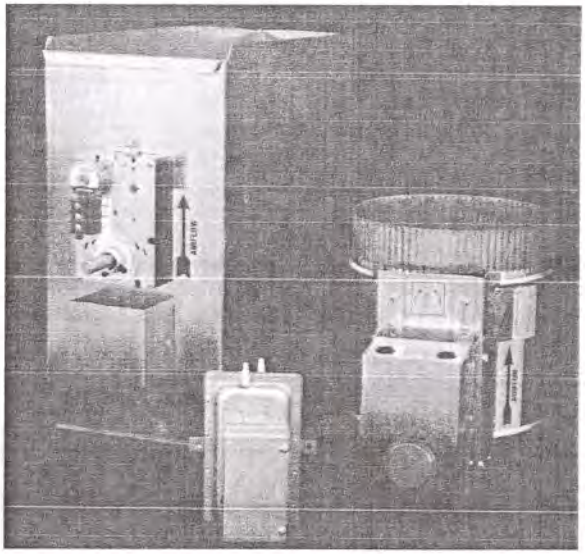

RECTANGULAR & ROUND BYPASS DAMPER WITH THE STATIC PRESSURE CONTROL

SIZING ROUND ELECTRONIC BYPASS DAMPER For Round Electronic Bypass Dampers, bypass 70 percent of the systems total CFM at 2500 FPM. Many people ask what will happen if only one zone is calling and its volume is less than 30 percent of the total. This is not a problem because air is a compressible fluid. All the excess air will go through the bypass damper to the return even though the velocity may exceed 2500 FPM.

To calculate a bypass damper size, first calculate the CFM to be bypassed:
Multiply the A/C unit size in
Tons X 400 X .7 = bypass CFM needed.

Once you know the bypass CFM, use the table to determine the size bypass needed. Example: Select a round bypass for a 7 1/2 ton air conditioning unit: First determine the bypass air CFM. Multiply 7.5 X 400 X 0.7 = 2100 CFM. Now looking at the shaded area on the table below, see that 2100 CFM falls between 1750 and 2675. When the calculated size falls between two available sizes, always choose the larger, therefore, choose a 14 inch damper. Never exceed 16 inches for the round bypass damper. If you need to bypass more than 3125 CFM, either use a rectangular bypass or slave multiple round bypass dampers.

ROUND BYPASS CAPACITIES

PRESSURE DROP ▶	.07"	.1"	RECOMMENDED .2"
VELOCITY FPM ▶	1500 FPM*	1800 FPM*	2500 FPM*
DIA. ▼	CFM	CFM	CFM
6"	250	315	437
8"	470	567	787
10"	820	990	1375
12"	1060	1260	1750
14"	1590	1890	2675
16"	1850	2250	3125

* FPM = Feet Per Minute

ROUND DIMENSIONAL DATA

PART #	SIZE	D	L	W
STMPD06	6	6"	10"	10"
STMPD08	8	8"	10"	12"
STMPD10	10	10"	12"	14"
STMPD12	12	12"	14"	16"
STMPD14	14	14"	16"	18"
STMPD16	16	16"	18"	20"

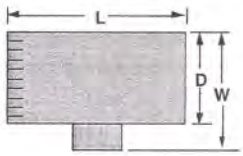

SIZING MULTIPLE ROUND ELECTRONIC BYPASS DAMPERS: If you need to bypass more air than a 16 inch damper can handle (3125 cfm), you can put 2 or more dampers in parallel and run them off the same static pressure controller. To size multiple dampers, first determine the amount of air to bypass, then simply select dampers using the table above till the CFMs add up to the total required. Example: Select round bypass dampers to bypass 5600 CFM. A 16 inch damper can only handle 3125 CFM. If a 16 inch damper is selected, then we still need a damper to handle 2475 CFM (5600-3125). The closest damper to 2475, but not under, is a 14 inch damper which can bypass 2675 CFM. In this case, use a 14 and a 16 inch to bypass 5600 CFM.

SIZING RECTANGULAR ELECTRONIC BYPASS DAMPER

To calculate a bypass damper size, first calculate the CFM to be bypassed:
Multiply the A/C unit size in Tons X 400 X .7 = bypass CFM needed.
Once you know the bypass CFM needed, use the chart below to determine the size bypass needed.

Example: Select a rectangular bypass for a 7 1/2 ton air conditioning unit: First determine the bypass air CFM. Multiply 7.5 X 400 X 0.7 = 2100 CFM. Now looking at the table below, choose a damper close to but not under 2100 CFM. The closest would be a 18" X 12" damper.

RECTANGULAR BYPASS DAMPERS
SELECT FROM 8 X 8 THRU 48 X 48

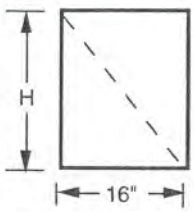

WIDTH	HEIGHT	DEPTH
W	H	16"

Part Number STCD W X H

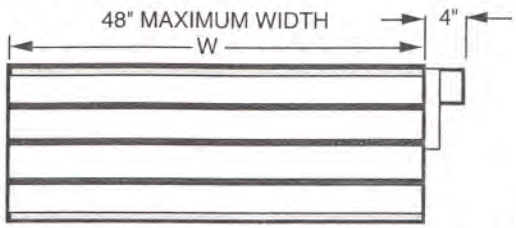

Rectangular bypass dampers should operate at 1500 FPM*.
E.G. A 24" x 12" damper = 2 square feet.
2 square feet X 1500FPM = 3000 CFM.
* FPM = Feet Per Minute

RECTANGULAR BYPASS DAMPER SELECTION TABLE (BYPASS AIR TO DAMPER SIZE)

Bypass air in CFM. Calculated at 1500 FPM.

Formula used: B = W X H / 144 X 1500, where B = Bypass air in CFM, W = damper width in inches, H= damper height in inches, 144 = 144 sq. inches per sq. ft., 1500 = 1500 FPM.

HEIGHT IN INCHES ↓ / WIDTH IN INCHES →	8	10	12	14	16	18	20	22	24	28	32	36	40	44	48
8	667	833	1000	1167	1333	1500	1667	1833	2000	2333	2667	3000	3333	3667	4000
10	833	1042	1250	1458	1667	1875	2083	2292	2500	2917	3333	3750	4167	4583	5000
12	1000	1250	1500	1750	2000	2250	2500	2750	3000	3500	4000	4500	5000	5500	6000
14	1167	1458	1750	2042	2333	2625	2917	3208	3500	4083	4667	5250	5833	6417	7000
16	1333	1667	2000	2333	2667	3000	3333	3667	4000	4667	5333	6000	6667	7333	8000
18	1500	1875	2250	2625	3000	3375	3750	4125	4500	5250	6000	6750	7500	8250	9000
20	1667	2083	2500	2917	3333	3750	4167	4583	5000	5833	6667	7500	8333	9167	10000
22	1833	2292	2750	3208	3667	4125	4583	5042	5500	6417	7333	8250	9167	10083	11000
24	2000	2500	3000	3500	4000	4500	5000	5500	6000	7000	8000	9000	10000	11000	12000
28	2333	2917	3500	4083	4667	5250	5833	6417	7000	8167	9333	10500	11667	12833	14000
32	2667	3333	4000	4667	5333	6000	6667	7333	8000	9333	10667	12000	13333	14667	16000
36	3000	3750	4500	5250	6000	6750	7500	8250	9000	10500	12000	13500	15000	16500	18000
40	3333	4167	5000	5833	6667	7500	8333	9167	10000	11667	13333	15000	16667	18333	20000
44	3667	4583	5500	6417	7333	8250	9167	10083	11000	12833	14667	16500	18333	20167	22000
48	4000	5000	6000	7000	8000	9000	10000	11000	12000	14000	16000	18000	20000	22000	24000

BYPASS POSITION INDICATORS

ROUND BYPASS DAMPER TOP VIEW OF HAT

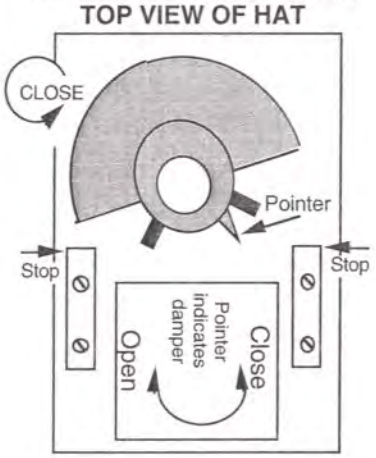

RECTANGULAR BYPASS DAMPER MOTOR

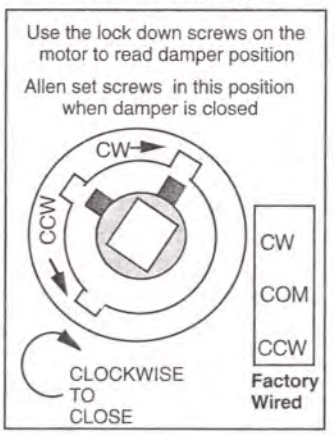

SLAVING BYPASS DAMPERS

Use only one Pressure sensor when slaving two or more Bypass Dampers together. Connect the Pressure Sensor to one damper as described above. Connect the slave dampers in parallel as shown. Up to 4 dampers can be slaved to one Sensor. The slaved dampers will self synchronize each time the dampers reach full open or full close.

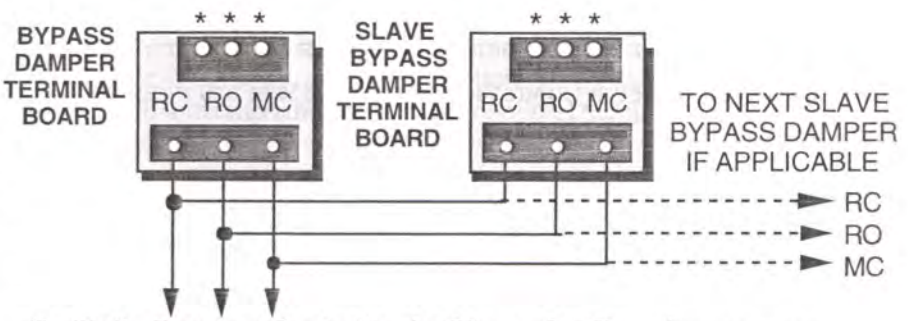

To Static Pressure Controller As Shown On The Bypass Wiring Diagram On The Previous Page

* Factory wired

STATIC PRESSURE CONTROLLER

The static pressure controller controls a standard medium pressure round damper (STMPD) or the heavy duty rectangular damper (STCD) by maintaining constant static pressure in the duct downstream of the bypass takeoff. As the zone dampers close, the static pressure increases. When this happens, the static pressure controller opens the bypass damper to bring the static pressure back to the set point.

STATIC PRESSURE CONTROL DESCRIPTION

A: Mounting tabs.
B: Supply air barb.
C: Reference air, "LOW", barb.
D: Diaphragm must be mounted vertical.
E: Pressure adjusting screw.
F: Normally closed, N/C, terminal.
G: Normally open, N/O, terminal.
H: Common, COM, terminal.

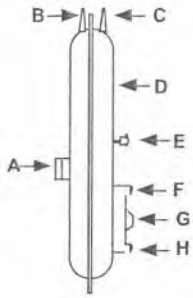

ELECTRONIC BYPASS USING A STATIC PRESSURE CONTROLLER

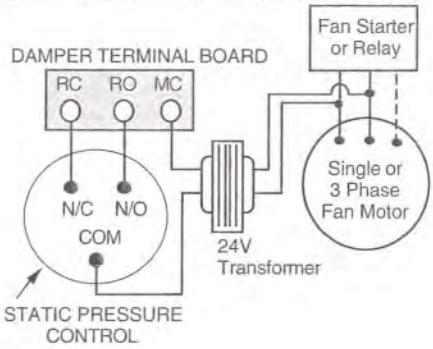

STATIC PRESSURE CONTROLLER INSTALLATION

a) Select location for pressure sensor tube. Location should be in supply duct, downstream of bypass takeoff, upstream of any zone dampers and perpendicular to the air flow.
b) Drill 5/16" hole at selected location for pressure sensor tube.
c) Mount Static Pressure Controller near the drilled hole with the diaphragm of the sensor vertical. The controller must be mounted on a stable, non vibrating surface.
d) Attach 5/16 inch pressure sensor tube, supplied, to the barb of the Static Pressure Controller located closest to the mounting tabs. The other barb, labeled "LOW", is left open if the Controller is in the conditioned building. If the Controller is located outside the building, another tube, not provided, must be connected between the "LOW" barb and a location inside the building.
e) Remove the terminal cover and wire as shown in the wiring diagram.
f) Reattach terminal cover. Installation complete. Proceed to Static Pressure Controller Setup.

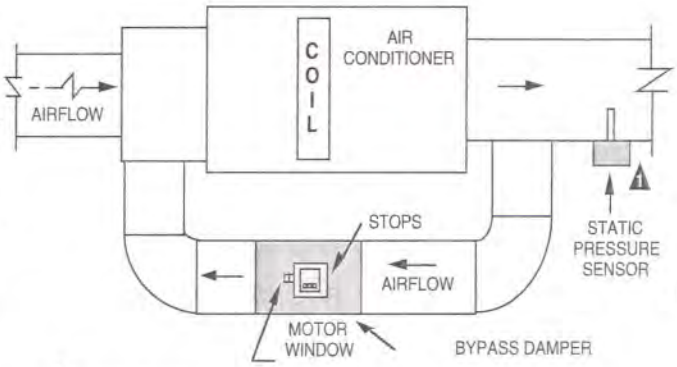

⚠ Insert the tube into the side of the duct, approximately 3". Make sure the tube is perpendicular to the air flow.

STATIC PRESSURE CONTROLLER SET UP

a) Connect A/C voltmeter to common and N/O terminals of the static pressure controller.
b) Turn off all thermostats.
c) Turn on Controller and set fan switch to "ON" position. Allow fan to run for 5 minutes to equalize pressure. During this time, be sure all dampers are open by checking for air flow out of each damper.
d) Turn adjusting screw on the static pressure controller clockwise until 24 volts is displayed on the meter. Do not over tighten. This will make the bypass damper(s) close. The adjusting screw is located next to the electrical terminals under the terminal cover.
e) Make sure the damper fully closes. This could take up to 90 seconds.
f) Turn adjusting screw slowly counterclockwise until the meter reads 0 volts. Then immediately turn screw clockwise until the meter reads 24 volts.
g) The static pressure controller is now calibrated.

NOTE: Static Pressure Controller may be used with any medium pressure round or heavy duty rectangular damper.

BYPASS CHECKOUT FOR STATIC PRESSURE SENSOR

a) Have at least half of the zones call for heating or cooling.
b) Check to be sure the calling zone dampers are open (air is flowing).
c) Verify that the bypass damper is slightly open by looking at the pointer on the damper. See the drawing above.
d) If the open zones are not noisy, the pressure control is calibrated.

CAPACITY CONTROL (CAP)

101CAPGE Pt# 46N54

An HVAC system is sized to handle the load of an entire building. Because of this, when all the zones are not calling, the load to the HVAC system can diminish below its designed capacity. Left unchecked, the A/C coil could freeze up causing compressor slugging or the furnace could overheat causing premature heat exchanger failure. To compensate for this, a Capacity Controller is needed.

California Economizer offers the 101CAPGE for capacity control. It protects both the compressor and furnace and is field adjustable with a non volatile memory*.

The 101CAPGE is a one or two stage device designed to operate with the VVHC or VVHC ENHANCED Systems and a gas/electric or heat pump unit.

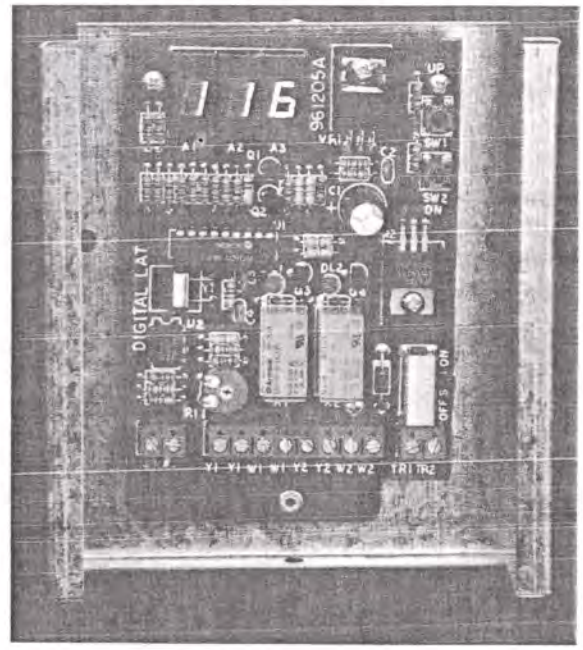

DIMENSION 4.5" X 5" X 1.5"

101CAPGE Gas Electric Application

The 101CAPGE is a simple two stage on-off device located in the leaving air stream of the A/C unit. During a low-load cooling cycle, the CAP reduces compressor capacity to protect coil freeze ups and prevent short cycling. In heating operation, the CAP will cycle the gas valve to protect the heater from over heating and premature heat exchanger failure.

The 101CAPGE normally displays the current supply air temperature. By pressing a button, both the first stage heat and cool cutoff set points can be displayed or modified. The timeout is factory set and cannot be changed. The factory default cutoff set points for the 101CAPGE are: 150 degrees Fahrenheit for first stage heat and 48 degrees Fahrenheit for first stage cool.

If the air gets too cold (drops below the Cool cutoff set points), the 101CAPGE breaks the "Y1" and "Y2" connection, turning off the compressor. If the air gets too warm (rises above the Heat cutoff set points), it breaks the "W1" and "W2" connection, turning off the furnace while the fan continues to operate. To prevent short cycling, the CAP has a 4 minute time out per stage before the compressors or heaters can turn back on. The first stage heating and cooling cutoff set points can easily be changed by the installer. The second stage cutoff set point's differential is not modifiable. For cooling, the second stage cutoff set point is always 4 degrees above the first stage cutoff set point. The second stage heat cutoff set point is always 5 degrees below the first stage heat cutoff set point.

101CAPGE Heat Pump Application

The 101CAPGE may also be used in a heat pump application. **It is important to change the heat cutoff set point to 118 degrees as soon as the CAP is installed.** The is a simple two stage on-off device located in the leaving air stream of the heat pump. It should be installed in the leaving air stream, after the compressor and before the electric heat coil. During a low-load cooling cycle, the CAP reduces compressor capacity to protect against coil freeze ups and prevent short cycling. In heating operation, the CAP will protect against high head pressure at the heat pump. If the air gets too cold (drops below the Cool cutoff set points), the CAP breaks the "Y1" and "Y2" connection, turning off the compressor. If the air gets too warm (rises above the Heat cutoff set points), it breaks the "W1" and "W2" connection, turning off the furnace while the fan continues to operate. To prevent short cycling, the CAP has a 4 minute time out per stage before the compressor can turn back on. The heating and cooling cutoff set points can easily be changed by the installer and the heat cutoff set point must be modified to 118 degrees during installation. The CAP normally displays the current supply air temperature. By pressing a button, both the first stage heat and cool cutoff set points can be displayed or modified. The 4 minute time out is factory set and cannot be changed. The factory default cutoff set points for the 101CAPGE are: 150 degrees Fahrenheit for heat and 48 degrees Fahrenheit for cool (The heat cutoff set point must be modified for heat pump application during installation). For cooling, the second stage cutoff set point is always 4 degrees above the first stage cutoff set point. The second stage heat cutoff set point is always 5 degrees below the first stage heat cutoff set point.

Note: The 101CAPGE sensor can be remotely located up to 500 feet from the digital display.

* CAPs manufactured after 12/97 contain a non volatile memory: At power loss or interruption, the CAP's will continue operating at the last assigned heat and cool set points.

CAPACITY CONTROL SEQUENCE OF OPERATION: (CAP)

CAP OPERATIONS AT POWER UP*: When power is first turned on, the CAP displays the temperature in the supply air duct. The 101CAPGE will operate using the factory default cutoff set points; 48 degrees F. for first stage cooling, 52 degrees F. for second stage cooling. The heat default cutoff set points are 150 degrees F. for first stage heat and 145 degrees F. for second stage heat. These set points are field adjustable. For heat pump application the 101CAPGE cutoff set point for first stage heat must be field modified to 118 during installation.

Sequence of operation on a single stage system:

Cooling: If the supply air temperature drops below the cool cutoff set point: The on board light, DL1, will turn on and activate a normally closed relay breaking Y1. This will take the cooling offline. Once the supply air temperature rises above the cool cutoff set point, a four minute time delay begins. At the end of this time delay, DL1 turns off and the relay returns to its normally closed position which makes Y1. This will allow cooling to restart.

Heating: If the supply air temperature rises above the heat cutoff set point: The on board light, DL1, will turn on and activate a normally closed relay breaking W1. This will take the heating offline. Once the supply air temperature drops below the heat cutoff set point, a four minute time delay begins. At the end of this time delay, DL1 turns off and the relay returns to its normally closed position which makes W1. This will allow heating to restart.

Sequence of operation on a two stage system: Second Stage Cooling: If the supply air temperature drops to four degrees above the cool cutoff set point: The on board light, DL2, will turn on and activate a normally closed relay breaking Y2. This will take the second stage cooling offline. Once the supply air temperature rises four degrees above the cool cutoff set point, a four minute time delay begins. At the end of this time delay DL2 turns off and the relay returns to its normally closed position which makes Y2, allowing second stage cooling to restart.

First Stage Cooling: If the supply air temperature drops below the cool cutoff set point: The on board light, DL1, will turn on and activate a normally closed relay breaking Y1. This will take the first stage cooling offline. Once the supply air temperature rises above the cool cutoff set point, a four minute time delay begins. At the end of this time delay, DL1 turns off and the relay returns to its normally closed position which makes Y1. This will allow first stage cooling to restart.

Second Stage Heating: If the supply air temperature rises to five degrees below the heat cutoff set point: The on board light, DL2, will turn on and activate a normally closed relay breaking W2. This will take the second stage heating offline. Once the supply air temperature drops to five degrees below the heat cutoff set point, a four minute time delay begins. At the end of this time delay, DL2 turns off and the relay returns to its normally closed position which makes W2. This will allow second stage heating to restart.

First Stage Heating: If the supply air temperature rises above the heat cutoff set point: The on board light, DL1, will turn on and activate a normally closed relay breaking W1. This will take the first stage heating offline. Once the supply air temperature drops below the heat cutoff set point, a four minute time delay begins. At the end of this time delay, DL1 turns off and the relay returns to its normally closed position which makes W1. This will allow first stage heating to restart.

The time delays listed above allow the Capacity Control to use "Time" to control the capacity of the A/C unit it is protecting. These time delays stop the system from banging compressors on and off and prematurely burning out heat exchangers.

CAPACITY CONTROL INSTALLATION (CAP)

a) Select location for CAP. For Gas/Electric units, locate the CAP sensor in the supply air, upstream of any take offs. For heat pumps, install between the Coil and the Auxiliary Heat Strip. See diagrams below.

b) Cut or drill a hole, large enough to fit the sensor through, in the selected location.

c) Place sensor through hole and attach casing with screws. Be careful not to cut or crimp the sensor wires.

d) Wire per drawing for Controller/Switching Center you are using.

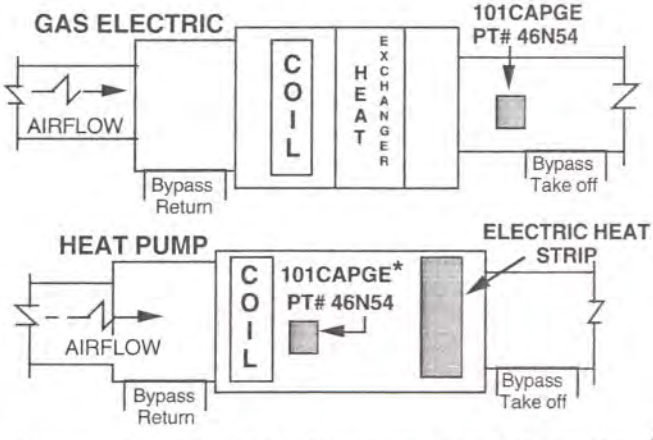

e) If preferred, the CAP sensor can be removed from the casing and the digital display can be remotely located.

Turn the power switch to "ON" to begin operation. The current duct temperature will be displayed.

*For heat pump application the 101CAPGE cutoff set point for first stage heat must be field modified to 118 during installation.

Determine the existing cutoff set points on a 101CAPGE:

1. To determine the existing heat cutoff set point, press and hold the button marked "UP" until the letter "H" appears and then release. The current heat cutoff set point will be displayed following the letter "H". (If the button is held down too long the heat cutoff set point will begin to increase). Approximately two seconds after the button is released the duct temperature will be redisplayed.
2. To determine the existing cool cutoff set point, press and hold the button marked "DN" until the letter "C" appears and then release. The current cool cutoff set point will be displayed following the letter "C". (If the button is held down too long the cool cutoff set point will begin to decrease). Approximately two seconds after the button is released the duct temperature will be redisplayed.

Second Stage Cutoff Set Points: Second stage cutoff set points are automatically programmed into the CAP. The second stage heat cutoff is 5 degrees F. below the first stage heat cutoff. The second stage cool cutoff is 4 degrees F. above the first stage cool cutoff. For example, if the first stage heat cutoff is set at 150 degrees, the second stage will cutoff at 145 degrees. As first stage cutoff set points are modified, second stage cutoff set points will follow.

For heat pump application the 101CAPGE cutoff set point for first stage heat must be field modified to 118 during installation.

Modifying the Set Points:

1. To change the heat cutoff set point, press and hold the button marked "UP" until the heat cutoff set point is displayed. Continue to press this button (the up button) to increase the heat cutoff set point or release "UP" button and press and hold the button marked "DN" to reduce the heat cutoff set point to the desired temperature.
2. To change the cool cutoff set point, press and hold the button marked "DN" until the cool cutoff set point is displayed. Continue to hold the "DN" button to lower the cooling cutoff set point or press the "UP" button to raise the cool cutoff set point to the desired temperature.

Typical wiring diagrams for the 101CAPGE* Capacity Controllers

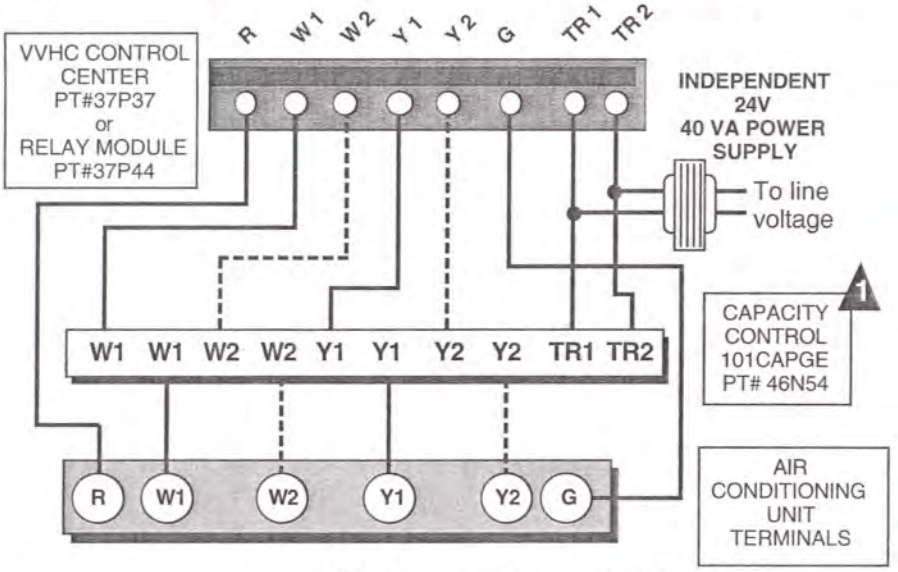

For VVHC Control Center wiring diagram see Control Center Wiring and Installation.

For Relay Module wiring diagram see Relay Module Installation and Wiring

All wiring shown should be 18 ga. solid thermostat wire.

For heat pump applications use the 101CAPGE and modify the heat set point to 118

CAP REMOTE SENSOR WIRING:

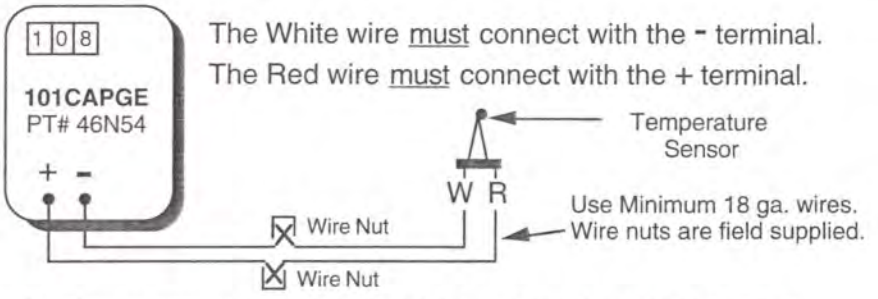

Maximum remote wire length 500 feet from the digital display.